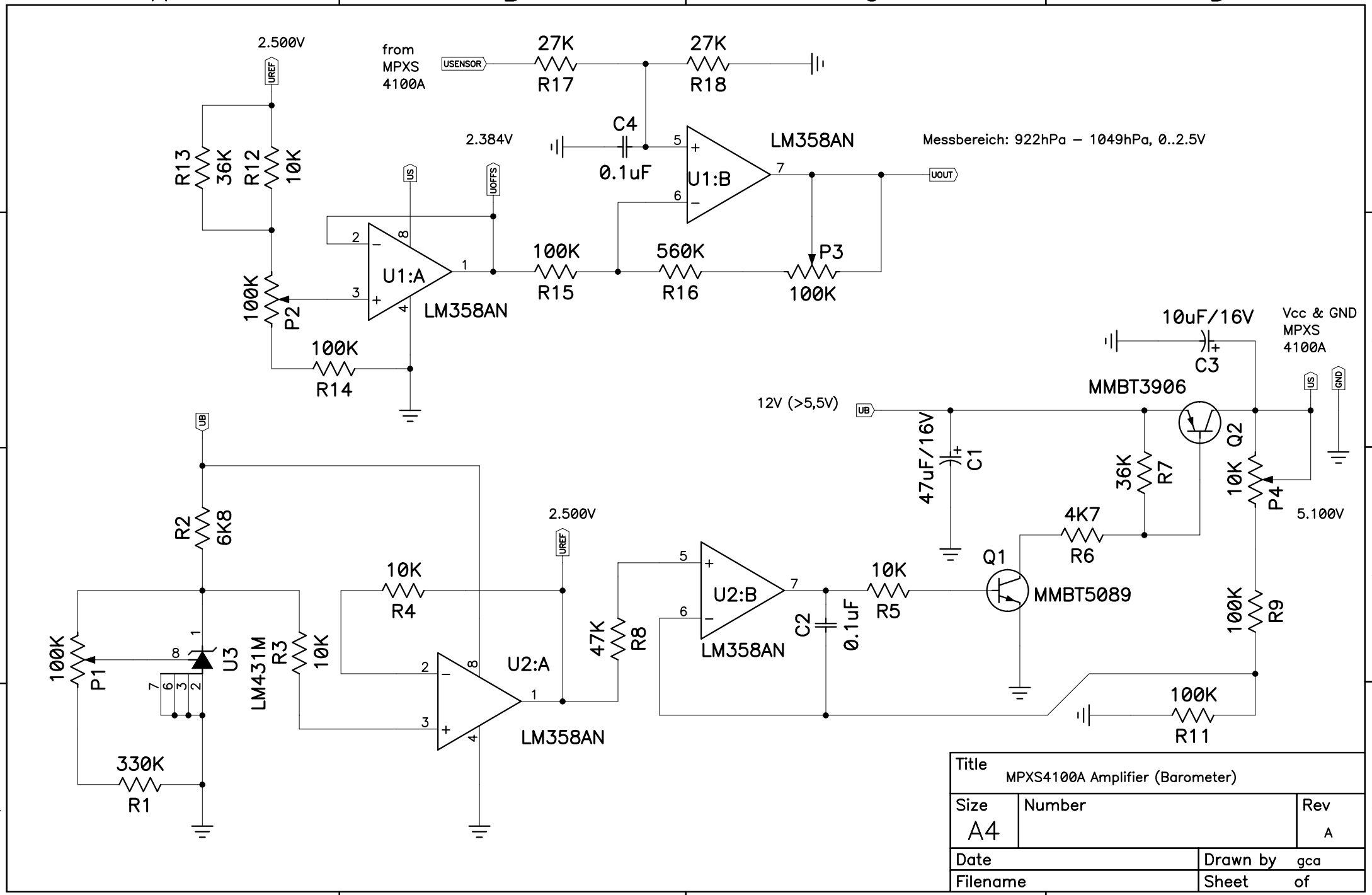

Title		
MPXS4100A Amplifier (Barometer)		
Size A4	Number	Rev A
Date	Drawn by gca	
Filename	Sheet of	